A Broadcom Company

Eltra® focused on motion

EL 63 FB / GB / PB / PBF / PC / PCF

BLIND / THROUGH HOLLOW SHAFT INCREMENTAL ENCODER

MAIN FEATURES

Hollow shaft encoder series for small AC motors, thanks to compact size (only 35 mm height).

- 3 channel encoder (A / B / Z) up to 2500 ppr
- Power supply up to +28 V DC with several electrical interfaces available
- Up to 300 kHz output frequency
- Cable output, connectors available on cable end
- Through or blind hollow shaft diameter up to 15 mm
- Shaft fixing by collar clamping

ORDERING CODE

EL 63GB 500 S 5/28 P 8 X 3 PR . XXX

SERIES
incremental encoder EL

MODEL
blind hollow shaft with torque stop slot 63FB
blind hollow shaft with torque pin 63GB
through hollow shaft with torque pin 63PB
through hollow shaft with torque stop slot 63PBF
rear fixing shaft with torque pin 63PC
rear fixing shaft with torque stop slot 63PCF

RESOLUTION
ppr from 1 to 2500
refer to the available pulses list

ZERO PULSE
without zero pulse S
with zero pulse Z

POWER SUPPLY
(with L electrical interface) 5 V DC 5
5 ... 28 V DC 5/28

ELECTRICAL INTERFACE
NPN open collector C
push-pull P
line driver L
power supply 5/28V - output RS-422 RS

BORE DIAMETER
mm 8
mm 10
mm 12
mm 14
mm 15

ENCLOSURE RATING
IP 54 X

MAX ROTATION SPEED
3600 rpm 3

OUTPUT TYPE
radial cable (standard length 1,5 m) PR
preferred cable lengths 2 / 3 / 5 / 10 m, to be added after OUTPUT TYPE (eg. PR5)

VARIANT
custom version XXX

© Copyright 2021 Eltra S.p.a. Unipersonale. All rights reserved. All informations in this catalog are subject to change without notice.
Eltra takes no responsibility for typographic errors. For the terms of sales please check the website. REV. 210527

63 FB / GB

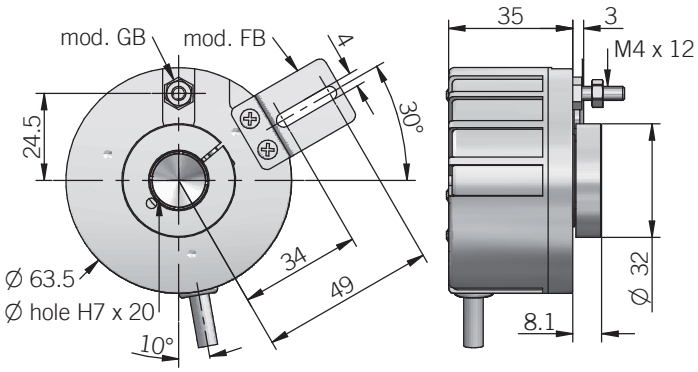

63 PB / PBF

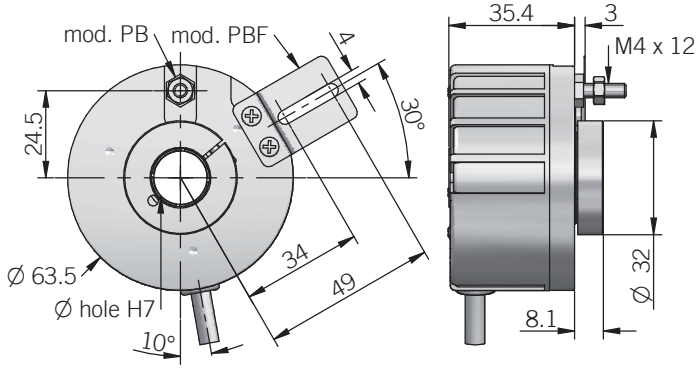

63 PC / PCF

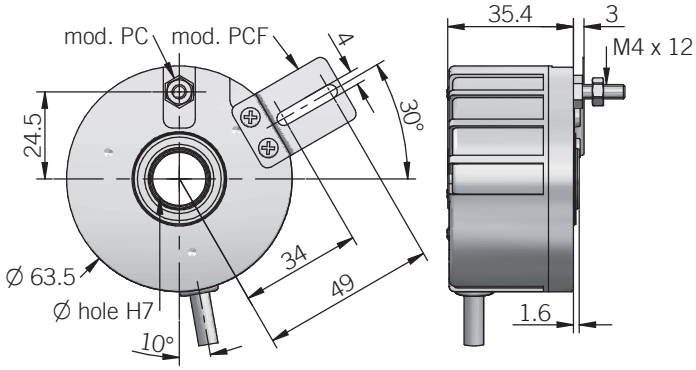

torque pin is included in model GB / PB / PC, for model FB / PBF / PCF please refer to Accessories

RECOMMENDED INTERFACE FLANGE DESIGN
63 PC

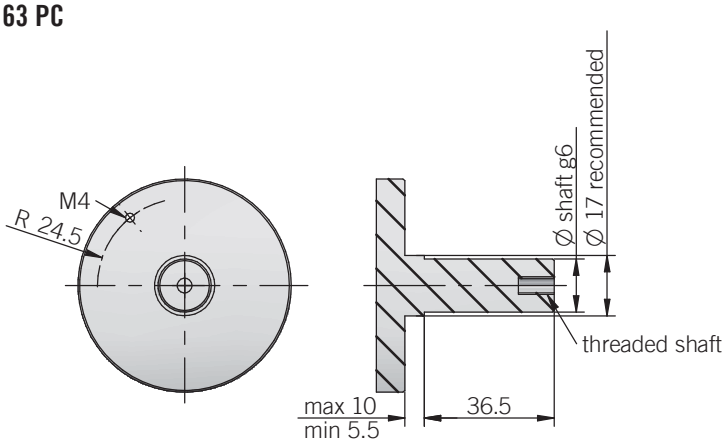

dimensions in mm

© Copyright 2021 Eltra S.p.a. Unipersonale. All rights reserved. All informations in this catalog are subject to change without notice.
Eltra takes no responsibility for typographic errors. For the terms of sales please check the website. REV. 210527

ELECTRICAL SPECIFICATIONS

Resolution	from 1 to 2500 ppr
Power supply[1]	5 = 4,5 ... 5,5 V DC 5/28 = 4,5 ... 30 V DC (reverse polarity protection)
Power draw without load	800 mW max
Max load current	C / P = 50 mA / channel L / RS = 20 mA / channel
Electrical interface[2]	NPN open collector (AEIC-7273, pull-up max +30 V DC) push-pull / line driver HTL (AEIC-7272) line driver RS-422 (AELT-5000 or similar)
Max output frequency	300 kHz
Counting direction	A leads B clockwise (shaft view)
Electromagnetic compatibility	according to 2014/30/EU directive
RoHS	according to 2011/65/EU directive
UL / CSA	certificate n. E212495

RESOLUTIONS

1 - 2 - 5 - **20** - 25 - **32** - 50 - 60 - 100 - 128 - **200** - 250 - 256 - **360** - 400 - 500 - 512 - 600 - 720 - 1000 - **1024** - 1440 - 1800 - **2000** - 2048 - 2500

please directly contact our offices for other pulses, preferred resolutions in bold

CONNECTIONS

Function	Cable C / P	Cable L / RS
+V DC	red	red
0 V	black	black
A+	green	green
A-	/	brown or grey
B+	yellow	yellow
B-	/	orange
Z+	blue	blue
Z-	/	white
⏚	shield	shield

MECHANICAL SPECIFICATIONS

Bore diameter	ø 8 / 10 / 12 / 14 / 15 mm
Enclosure rating	IP 54 (IEC 60529)
Max rotation speed	3600 rpm continuous / 4000 rpm peak
Shock	50 G, 11 ms (IEC 60068-2-27)
Vibration	10 G, 10 ... 2000 Hz (IEC 60068-2-6)
Moment of inertia	4 x 10^{-6} kgm^2 (95 x 10^{-6} lbft^2)
Starting torque (at +20°C / +68°F)	< 0,04 Nm (5,66 Ozin)
Bearing stage material	EN-AW 2011 aluminum
Shaft material	1.4305 / AISI 303 stainless steel
Housing material	PA 66 glass fiber reinforced
Bearings	n.2 ball bearings
Bearings life	10^9 revolutions
Operating temperature[3, 4]	-10° ... +60 °C (+14° ... +140°F)
Storage temperature[4]	-25° ... +70 °C (-13° ... +158°F)
Weight	350 g (12,35 oz)

[1] as measured at the transducer without cable influences
[2] for further details refer to OUTPUT LEVELS on TECHNICAL BASICS section
[3] measured on the transducer flange
[4] condensation not allowed

© Copyright 2021 Eltra S.p.a. Unipersonale. All rights reserved. All informations in this catalog are subject to change without notice.
Eltra takes no responsibility for typographic errors. For the terms of sales please check the website. REV. 210527